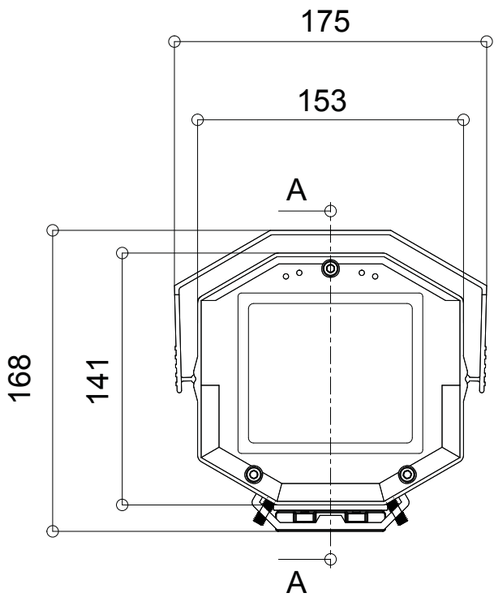


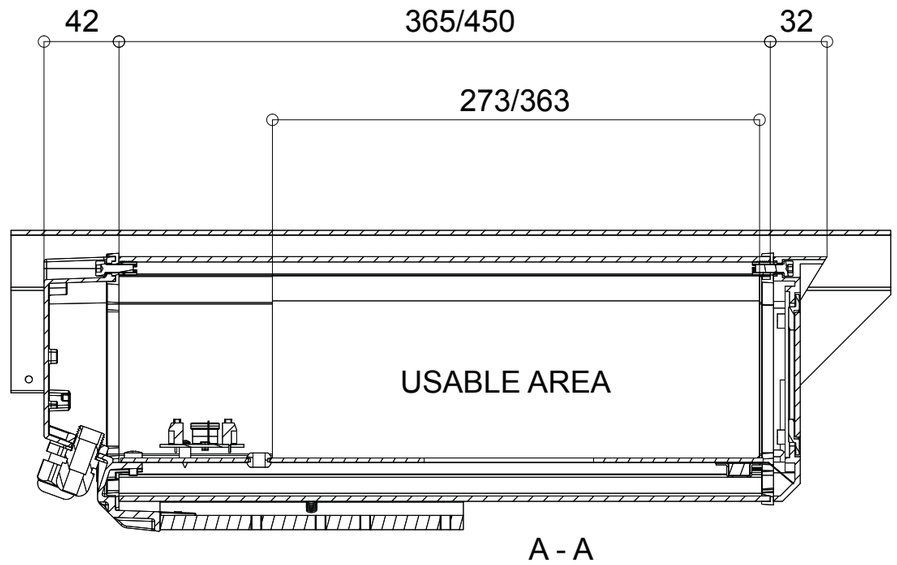


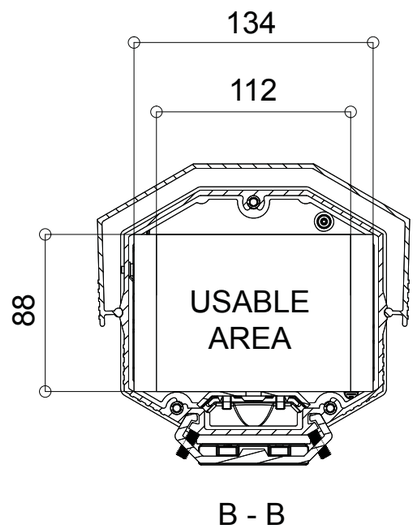


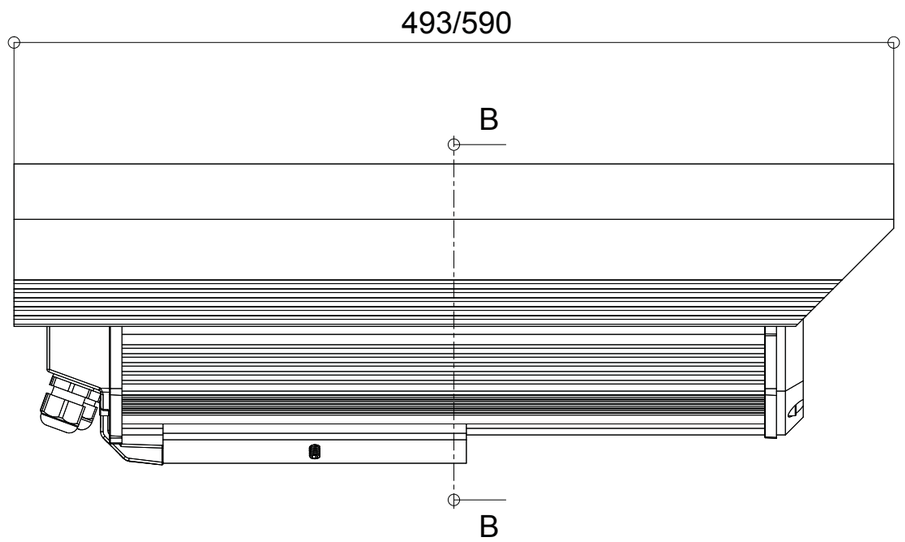


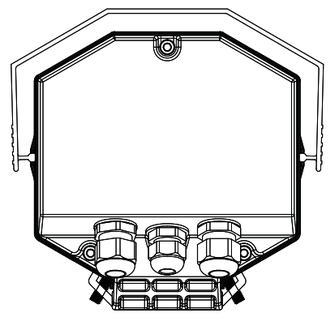

RoHS Compliance

| Model code | THS-G365/450 | No.TTD-00319012 | Camera Housing G |
|---|---|---|---|

*Specification subjects to change without notice

2016 All rights reserved. 3D Corporation